Sterile Visual Flow Indicator for Hygienic Applications

Data Sheet 01-0080 03/11

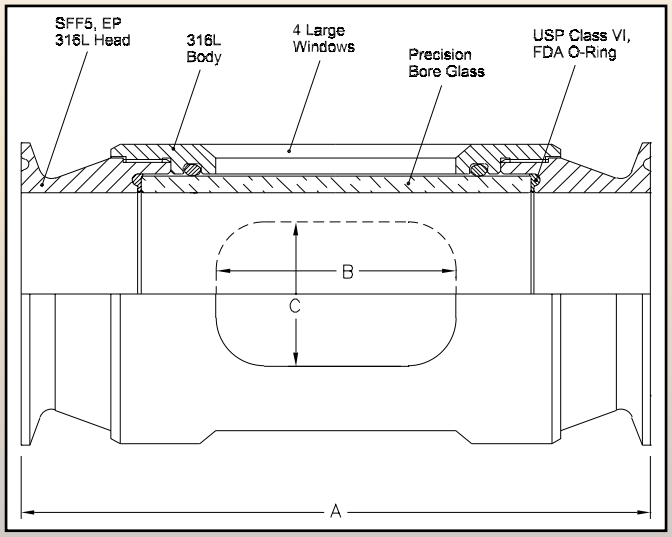

Base P/N	Tube OD	A	B	C	Wt.(lbs)
SVF-A03	3/8”	65	20	9	0.3
SVF-A05	1/2”	76	20	9	0.4
SVF-A07	3/4”	87	30	11	0.4
SVF-A10	1”	91	30	16	1.0
SVF-A15	1-1/2”	105	40	24	1.1
SVF-A20	2”	120	48	35	1.5
SVF-A25	2-1/2”	151	55	40	5.9
SVF-A30	3”	175	90	50	7.2
SVF-A40	4”	200	110	60	10.0

* All dimensions in mm unless otherwise stated

Designed to be mounted in-line for high purity hygienic applications, these sterile-design visual flow indicators provide operators a clear view of flow of virtually any process pipeline fluid or powder. They feature an internal-flush style based on a unique O-ring seal design that minimizes traps where bacteria can buildup. Polished stainless steel sanitary clamp connections are standard with orbital weld, Swagelok TS, flange or union connections as special order items.

Other premium standard features include the use of precision bore borosilicate glass, a product contact surface of SF4 (15 Ra Max) Electropolish and an armored housing to help protect the glass from external objects and pipe stress. Units can be used during SIP/CIP and sterilizing/autoclaving.

Units are available from stock in tube OD sizes from 3/8 to 4 inches with standard lengths shown below. Depending on OD, units are rated up to 150 PSIG. Custom designed lengths, connection sites and types are also available.

Standard material of construction is 316L Stainless Steel with full material traceability AMSE (BPE Standards). For corrosive service, Hastelloy® and AL6XN® are also available. All gaskets meet USP Class VI, are FDA compliant and are fully traceable. EPDM is the standard O-ring material with Silicone, Viton®, and FEP jacketed Silicone as options.

For additional information and applications assistance contact:

L.J. Star Incorporated
P.O. Box 1116, Twinsburg, OH 44087
Phone: (330) 405-3040 • Fax: (330) 405-3070
Web Page: www.ljstar.com • e-mail: view@ljstar.com

L.J.STAR INCORPORATED